Two Wheel Tractor Newsletter May 2011

USAID Two Wheel Tractors in Afghanistan.

In the last newsletter, I reported on USAID project to supply over 6000 two-wheel tractors at a subsidised price to farmers in Afghanistan. USAID now has a video on this. Have a look at:
http://www.youtube.com/watch?v=_ScLH00H45Y
It is over four minutes long, and may be a big for some on slow Internet connections.

A better picture of the Thai two wheel tractor seed drill for direct seeding of rice.

This unit was designed by Mr Suraweth Krishnasrei, of the Agricultural Machinery Division of the Thai DOA, He has now retired but remains as a Senior Advisor to the Thai DOA.

It appears to have staggered double disc openers, fitted to a simple 50 mm sq. tool bar.


Here is a picture of a field planted with the seed drill and another of a similar unit fitted to a four wheel tractor.
My Thanks to John Schiller of Univ. of Queensland for this information.

Mr. Sun Liangjun, the Manager of the Two Wheel tractor Division of Dong Feng Agricultural machinery Co. in Changzhou PR China, has sent me details of a new seed metering system for the 2BG-6A rotary seed drill for two wheel tractor. I have pasted portion of his report below. More details on request.

Seed Spacing Drill (Hill Drill) Model 2BD-4

This is the basic seed drill.

These are the results for hill planting direct seeded rice.

1. Working principle

The shallow tiller adopted in the Seed Spacing Drill Model 2BD-4 could be the same of the traditional Cultivator drill Model 2BG-6A, but sowing portion is different. The power is from the sprocket on right hand half axle of the walking tractor through the drive chain to the (smaller) driven sprocket in the gearbox above the seed box, then through another chain to the seed meter gearbox to drive the seeding shaft, and then to drive the seed plate. The seed scoop will then fetch and cast the seeds into seed tube, and then precise amount of seeds shall drop into soil right behind the Seed colter instantly. At last the seeds will be covered with soil casted by the shallow tiller and rolled by the roller just as the same as the traditional Cultivator drill Model 2BG-6A does.

The Schematic drawing below shows the structure and working principle of the new pattern seed meter:

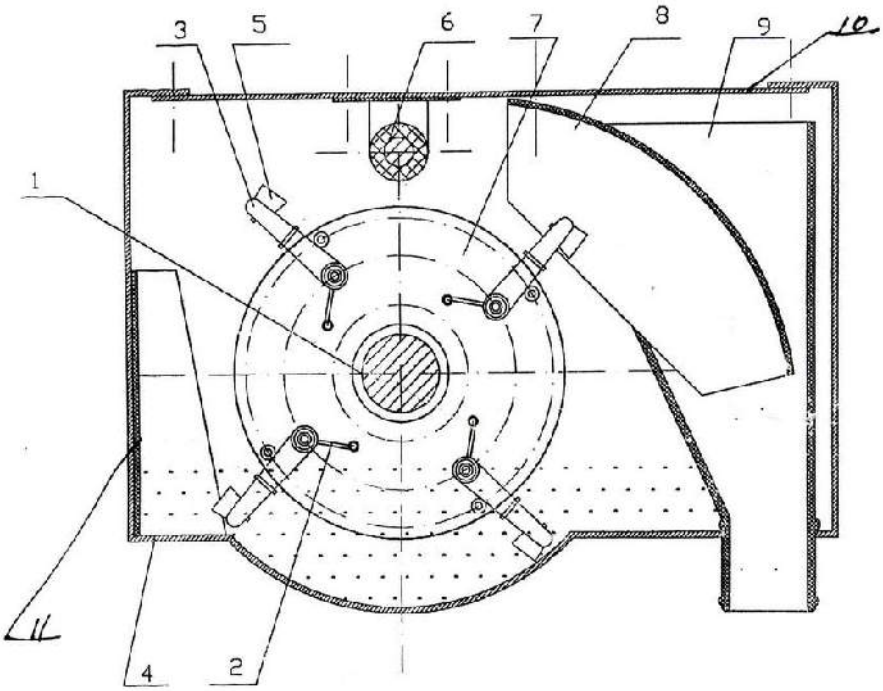

1. Shaft 2. Torsion spring 3. Seeding arm 4. Seed box 5. Seed scoop
6. Trigger wheel 7. Seed plate 8. Guiding cover 9. Seed tube
10. Beam 11. Brush bracket

2. **Mounting and adjusting of the Seed Spacing Drill Model 2BD-4**

The shallow tiller of the Seed Spacing Drill Model 2BD-4 is connected to the main gearbox of the walking tractor DF-12 (L) just as the mounting of the traditional Cultivator drill Model 2BG-6A.

The drive system is also alike the traditional Cultivator drill Model 2BG-6A, but fix the half type sprocket (Z 22) on the right side half axle of the walking tractor, connect the chain with the Sprocket (Z 22) with the sprocket in seed meter gearbox above the seed box, adjust the tensioner against the chain for obtaining the proper chain tension and keep the two sprockets in the same vertical plane.

The available row distance is of 250 mm, 300 mm and 800 mm. In case the user has special requirements in this regard, then it should be first consulted with the manufactory and place the special order after being confirmed by the manufactory. The seed space could be adjusted by changing the sprockets of different teeth number. For example, the manufacturer's setting of the seed spacing is of 220 mm, if interchanging the drive sprocket in the gearbox above the seed box and the driven sprocket in seed meter gearbox, then seed space of 300 mm could be obtained.

This is essentially a vertical cup feed seed meter. The demonstration is with rice. However three sizes of cups are available, and the inventor claims that all types of crop seeds can be planted, provided the correct cup is used.

This is a promising development. However some details on price would assist. Also independent tests on the accuracy of this meter compared to other systems would be of value.

Peter Chisawillo of Intermech Engineering, Morogoro, Tanzania has come up with this unique design for a two row seed drill to suit two wheel tractor.

It has some features of the John Morrison single row seed drill, which uses the coulter-tine-press wheel system. He has also taken some of the tool bar design features of the ACIAR-Rogro zero tillage seed drill.

The seed meters are the dual range fluted roller units, as supplied by Mr. Sun, and there is a fluted roller meter in the fertiliser box.

Congratulations to Peter and his team for this innovative seed drill. We await the results of field testing with interest.

ERB
EngineersNewsbrief
Promoting Professionalism and Excellence in Engineering

ISSN 1821-5092 Vol. X Number 1 January - April, 2011

Inside this issue

CONTENTS

Editorial Information

ERB Engineers Newsbrief is published three times per year by
Engineers Registration Board
Pamba Road
P. O. Box 14942 Dar es Salaam
Tel: (022) 2122836
Fax: (022) 2115373
Email: registrar@erb.go.tz
Website: www.erb.go.tz

Editorial

It is high time we renewed our commitment to appropriate technology

In the last issue of *Engineers Newsbrief*, the then minister for what was then the Ministry of Infrastructure Development, Eng. Dr Shukuru Kawambwa, was quoted as urging engineers to undertake research "that would bring about much needed technology appropriate to meet the challenges facing the people". Notwithstanding the fact that we do not know whether Dr. Kawambwa did the urging because he harboured some suspicion about the appropriateness of the research the engineers have been undertaking, we are revisiting the all important challenge because –as we all know – this is what engineering is all about.

Indeed, engineering is about providing solutions to real problems and more so using appropriate technology - the technology which is affordable, which is not destructive to the environment, which fits in the country's infrastructure, as well as one that can easily be maintained properly. It is an excellent concept to embrace.

Being the profession's mouthpiece, the *Engineers Newsbrief* fully embraces this philosophy and strives to promote those works which meet those challenges. It is for this reason that in this issue, we are hearing from Eng. Peter Chisawillo, Director at Intermech Engineering Limited, Morogoro. We are pleased to note that when Eng. Chisawillo first contributed to the Engineers Forum column of this newsletter nearly ten years ago, in the July – December 2001 issue – to be precise - he suggested that "Problems in our society should be seen as a catalyst for everyone to unleash their technical and entrepreneurial skills, in offering solutions which will not only guarantee the engineers self-employment but also contribute towards the survival and prosperity of our country."

At that time Eng. Chisawillo's words may have sounded rhetorical but he was in fact making a serious point: Problems are part of life and the best endeavour in life is to solve them – as opposed to keep on complaining about them. It is therefore pleasing to report that ten years on, Eng. Chisawillo, through Intermech Engineering Ltd, has been practicing what he preached as evidenced by the article from him.

But Eng. Chisawillo is not alone. As we saw in the last issue, Engineers at TEMDO in Arusha have also been actively advocating and perfecting home-grown technology for over a decade now while sharing their experiences with the local engineering community.

Perhaps it is worthy reminding readers that as far back as in the *ERB Engineers Newsbrief* of June - December 2002 Eng. Bakari Shekimweri of TEMDO, wrote and articulated a method to help small miners, saying: "If Tanzanian engineers [can] put their minds to it, artisanal miners at Mererani could easily benefit from [this] homegrown proposal to help improve mining methods there." Unfortunately, we do not know what came out of that proposal, but ten years on, TEMDO's enthusiasm is still evident: Eng. Kilassa, after narrating the company's meticulous development of an incinerator in the last issue of *ERB Engineers Newsbrief*, he implores everyone to value home-grown technology, saying, "We should first consume what we produce before we consume what we don't produce." One hopes that soon we will be hearing about other engineers doing the right thing somewhere in the country.

It is always easy to find ourselves blaming others whenever we fail to play our part meaningfully - it is human folly which we have to guard ourselves against. Engineers, being practically minded professionals, should always strive to *practice* what they preach as a basic rule.

And what we preach are developing and using appropriate technology to tackle the challenges we face. Let us do both.

***COVER PHOTO:** Views of the INTERMECH Seeder Model 2 developed by Intermech Engineering Ltd, Morogoro*

DEVELOPMENT AND MANUFACTURE OF NO TILL SEEDERS FOR TWO WHEELED TRACTORS

By Eng. Peter Chisawillo, Director, Intermech Engineering Ltd, Morogoro

Introduction

Today, the world is seeing a rapid increase in its population which has created an increasing demand for food. However, efforts to increase food supply –though commendable - have often led to production methods which impact the environment adversely, thereby undermining vital ecosystems of the very people they are meant to serve. Nowhere is this more evident than in developing countries, where sustainable food production would provide an opportunity for smallholder farmers to incorporate science and appropriate technology principles into their farming practices. Conservation Agriculture (CA) provides a potential for sustainable profitable agriculture, especially for smallholder farmers, through the application of the three CA principles: minimal soil disturbance, permanent soil cover and crop rotations.

CA-SARD

Conservation Agriculture for Sustainable Rural Development (CA-SARD) was a project implemented by the Food Agricultural Organisation (FAO) in Kenya and Tanzania. In Tanzania the project was hosted at the Selian Agricultural Research Institute (SARI) in Arusha. The project, which run from June 2004 to March 2011, had several objectives, including to promote improved socio-economic growth, food security and livelihoods and to address poor land management (conventional tillage) practices.

Local Manufacture of CA Equipment

One component of the project involved capacity building for local manufacture of CA equipment and in this regard, six firms visited Brazil in 2008 to work out modalities for collaboration and technology exchange. Later, in 2010, selected technicians received training in Brazil and Paraguay on the manufacture of CA equipment.

Intermech Engineering Ltd (IEL) of Morogoro, was involved throughout the capacity building process - first as delegates in a special exploratory FAO mission to Brazil in August-September 2007, then in the manufacturers' visit in 2008 and in the training of its technicians in 2010.

Furthermore, IEL in collaboration with the African Conservation Tillage Network (ACT) made full use of the global knowledge pool to source out for CA technologies suitable for single axel tractors (Two-wheeled tractors or 2WTs). In 2009 designs and sketches for the ACIAR – ROGRO 2WT Tined Seed Drill were obtained from Prof R. J. Esdaile of Tamworth, Australia, and a prototype was manufactured and tested.

In 2010, Prof John Morrison of John Morrison Consultants and the

ACIAR-ROGRO 2WT Direct Seeder Model

University of Tennessee in the USA brought a prototype and designs of a front mounted seed drill, which was tested and modified to suit the local soil conditions.

The machines were field tested evaluated by the Directorate of Mechanisation of the Ministry of Agriculture Food Security and Cooperatives and were later sent to CAMARTEC, Arusha for further testing.

After designing out the deficiencies of the other designs, second generation model - Intermech Model 1 rolled out. The Intermech Model was developed basing on the Morrison model but instead of front mounting, the planting units were mounted at the rear.

The frame for rear mounting was basically the frame of the ACIAR model. On testing, the Intermech Model unit was found to perform satisfactorily except for the fact that in rough terrain the seeding units lost contact with the soil, placing seeds above the soil. No provision had been made for independent suspension of the planting units to facilitate continuous contact with the soil.

Intermech developed and manufactured Model 2 seeder incorporating independent suspension of the seeding units to address the problem outlined above. This is the model that will go into commercial production once the field testing is completed.

Building the local capacity for design, development and manufacture of agricultural machinery and implements is critical to the realisation of green revolution in Africa. Collaboration in innovation and technology exchange between local and international institutions is one modality for fast tracking capacity building in this aspect. It is hoped that the availability of locally manufactured implements will assist in the adoption of Conservation Agriculture as a revolutionary cost-effective agricultural practice in Africa..

Technicians test the INTERMECH - ROGRO Design model

Technicians test the INTERMECH - ROGRO Design model

INTERMECH Seeder Model 2

Fabrication of ACIAR-Rogro design zero tillage seed drill for two wheel tractor In Cambodia.

Below are some pictures of partly made seed drills in the workshop of Russeykeo farm Implement Company in Phnom Penh, Cambodia.


Mr. Ouchhoeum Larano the principal of the company is in the left picture

Bob Martin, who is conducting an ACIAR Project in Cambodia arranged the fabrication. Altogether ten units will be made, six for research work and use by NGO's and farmer groups, and four for commercial sale. Bob has a whole suite of experiments lined up as soon as the machines are completed. The Cambodian Agricultural Research Institute (CARDI) is also assisting.

Rear lift and steering system for two wheel tractor.

This project has yet to be completed. I have encountered a few challenges. The lift system works OK, but a robust steering system eludes me at the present time.

I may be on the look out for an automotive design engineer who is expert in such matters. So far it has been trial and error